LDPRO Disk Light

LUXAR
Lighting for Life

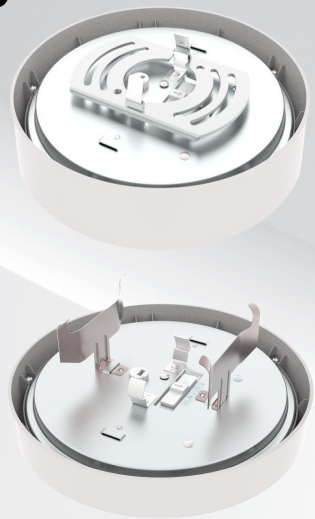

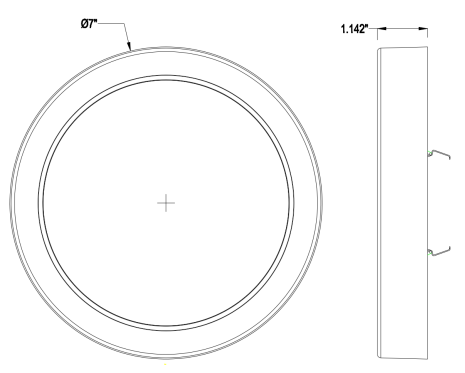

Wet Location | LED | 60 Hz

Features

- Trim/Shade color: White, Black, Bronze
- 5-CCT Selectable
- Suitable for Wet Location
- Samsung/Hongli LEDs
- Compatible with 2.75" & 3.5" Jbox
- Operating Ambient Temp: -20C - 40C
- Optional retro fit with accessory mount kit

SPCIFICATIONS

Item	5R	5S	7R	7S	9R	9S	11R	11S
Input voltage (V)	120V	120V	120V	120V	120V	120V	120V	120V
Power (W)	11.38	11.38	13.98	13.98	19.75	19.75	24.91	24.91
2700KEfficacy	61.86	61.86	64.38	64.38	70.68	70.68	70.98	70.98
2700K Lumens	704	704	900	900	1396	1396	1768	1768
CRI	90	90	90	90	90	90	90	90
CCT(K)	27/30/35/40/50	27/30/35/40/50	27/30/35/40/50	27/30/35/40/50	27/30/35/40/50	27/30/35/40/50	27/30/35/40/50	27/30/35/40/50
Wet	YES	YES	YES	YES	YES	YES	YES	YES
ES	YES	YES	YES	YES	YES	YES	YES	YES
T24	YES	YES	YES	YES	YES	YES	YES	YES
Hi Pot	AC-1240V	AC-1240V	AC-1240V	AC-1240V	AC-1240V	AC-1240V	AC-1240V	AC-1240V
Ring Wave	2.5kv	2.5kv	2.5kv	2.5kv	2.5kv	2.5kv	2.5kv	2.5kv
Triac/ELV(120V)	YES	YES	YES	YES	YES	YES	YES	YES